Innoscience
英诺赛科

POWER THE FUTURE

INNELD050A1

Evaluation Board Manual

Single Channel LiDAR EVB

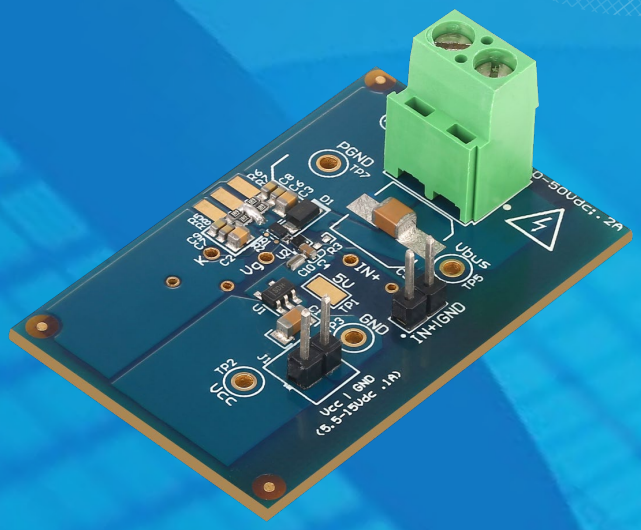

CAUTION

Please carefully read the following content since it contains critical information about safety and the possible hazard it may cause by

ELECTRICAL SHOCK HAZARD

There is a dangerous voltage on the demo board, and exposure to high voltage may lead to safety problems such as injury or death.
Proper operating and safety procedures must be adhered to and used only for laboratory evaluation demonstrations and not directly to end-user equipment.

HOT SURFACE

The surface of PCB can be hot and could cause burns. DO NOT TOUCH THE PCB WHILE OPERATING!!

REMINDER

This product contains parts that are susceptible to electrostatic discharge (ESD). When using this product, be sure to follow antistatic procedures.

List of Content

1. Overview

1.1. Introduction

INNELD050A1 is a LiDAR evaluation board for generating narrow pulse width (< 2 ns) high current pulses (≤ 50 A) to drive laser diodes. The board uses INN100W08 Enhanced Mode (E-Mode) FET, and INNELD050A1 integrates one GaN devices. For more detailed information about the devices, please visit the Innoscience official website. The INNELD050A1 LiDAR EVB evaluation board adjusts the peak value of the output pulse current by changing the main power supply voltage and adjusts the pulse width of the output pulse current by changing the pulse generated by the signal generator. The measurement interface uses an Oscilloscope voltage probe(≥1GHz) which can realize the measurement of sub-ns waveform, which perfectly demonstrates the ultra-fast switching capability of GaN HEMT, INNELD050A1 The commutator switching transient is <1 ns.

1.2. Test Equipment Requirement

To evaluate the performance properly, you need to prepare the following test equipment:

1) MSO54-2GHz-4CH oscilloscope; (bandwidth>1GHz)
2) AFG31000 signal generator; (minimum pulse width≤20ns)
3) Keithley 2231A-30-3 power supply; (maximum output voltage ≥ 12V)
4) IT6513 power supply; (maximum output voltage ≥ 40V)
5) 1GHz 300V CATII Probe; (impedance 1MΩ)

2. Parameters

Table 1 Electrical Characteristic（Ta=25℃）

Symbol	Parameters	Min	Nom	Max	Units
Vaux	Auxiliary input voltage	5.5	8	15	V
Vbus	Bus input voltage	0	30	40	V
Io	output load current			50	A
Zin	Input impedance		1M		Ω
Vsignal	Input pulse voltage	0		5	V
Fsignal	Input pulse frequency	0		150	MHz
Tsignal	Input pulse width	20		1000	ns

3. Block Diagram

The schematic diagram of INNELD050A1 evaluation board is shown in Figure 1. The Pulse input from the signal generator output is passed to the driver. When the input pulse becomes high, the driver opens the INN100W08 and capacitor C1 discharges through the laser diode D1. When the input pulse becomes low, Q1 turns off.

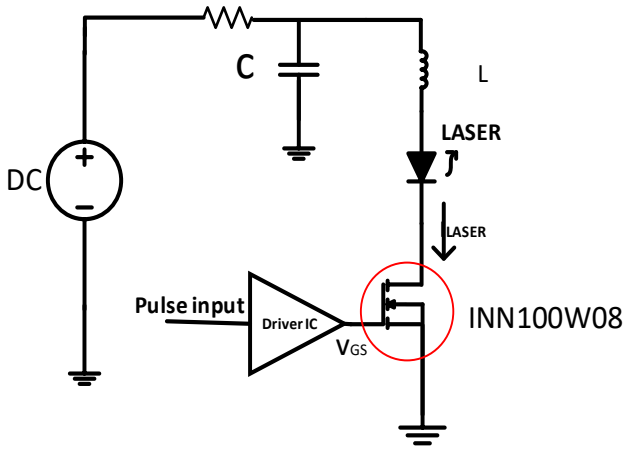

Figure 1 Schematic of LiDAR Application

4. PCBA Overview and Schematic

4.1. PCBA Overview

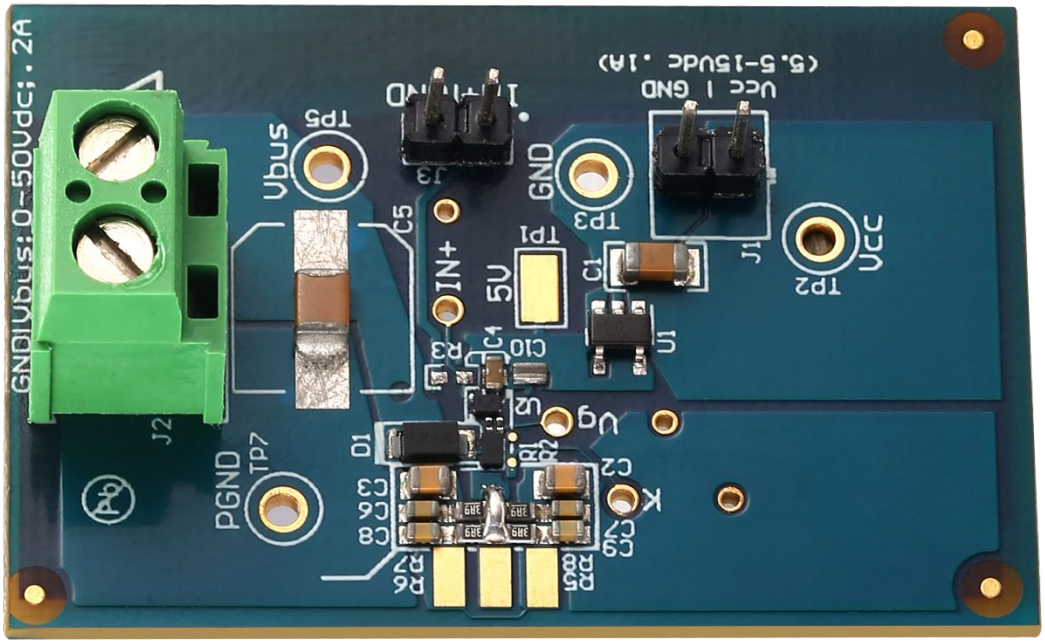

Figure 2 Top view of INNELD050A1

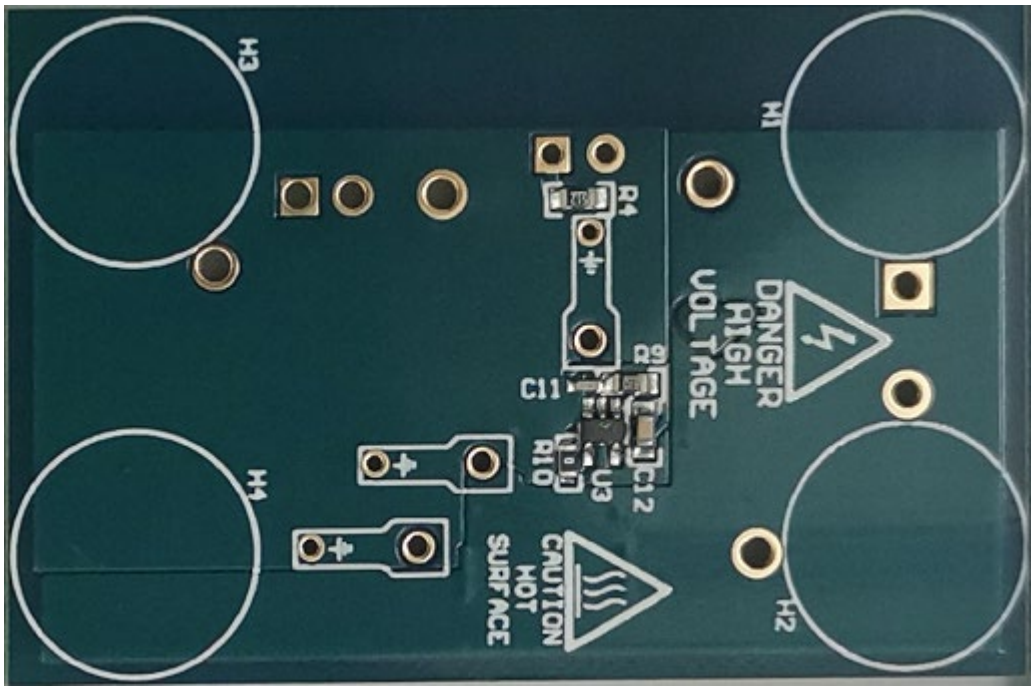

Figure 3 Bottom view of INNELD050A1

4.2. Schematic

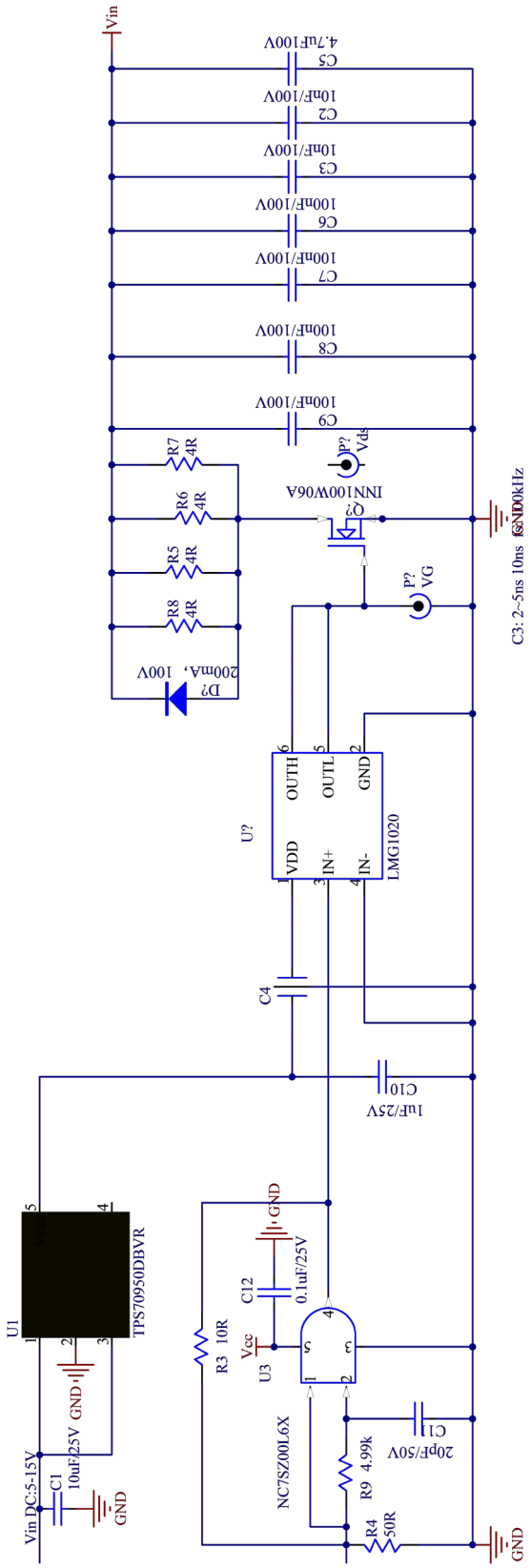

Figure 4 Schematic

5. Testing Guide

5.1. Test setup

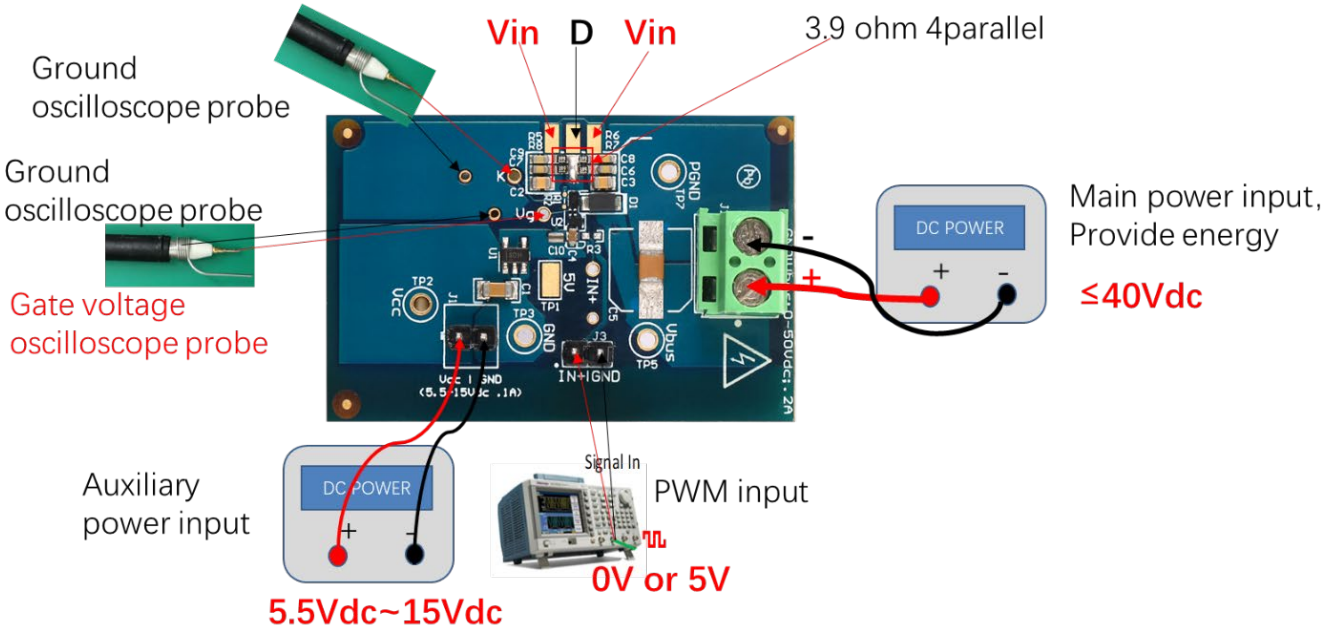

Figure 5 Measurement points

5.2. Power up and down sequence

Power on:

1. Auxiliary power input: 8Vdc. Current limit is greater than 0.5A.
2. PWM input: Frequency 100kHz, High:5V ,Low:0V, Width: 5ns (2ns to 20ns).
3. Main power input: 30Vdc. Current limit is greater than 10A

Power off:

1. PWM input off.
2. Main power input off.
3. Auxiliary power input off.

6. Evaluation Results

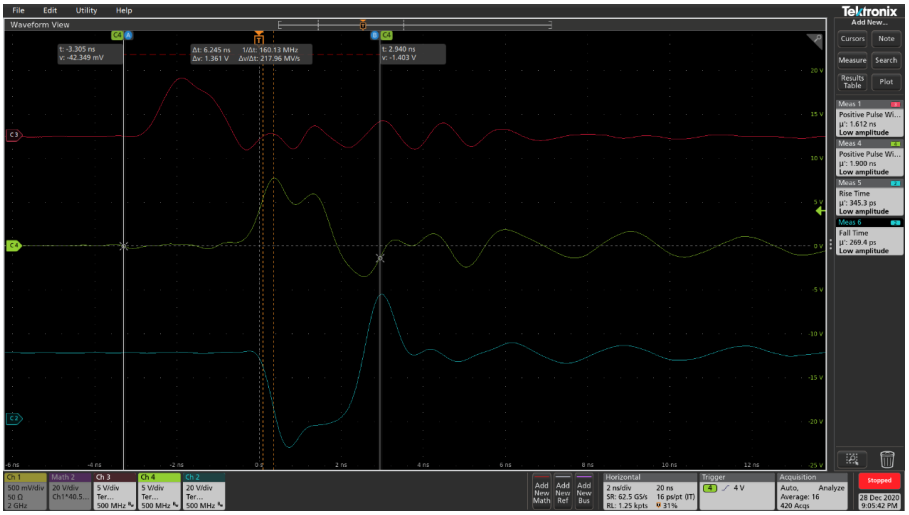

IN+ Pulse Width：1.612ns

V_G Pulse Width：1.900ns

V_{DS} tr：345.3ps

V_{DS} tf：269.4ps

Appendix

Appendix A. PCB Layout

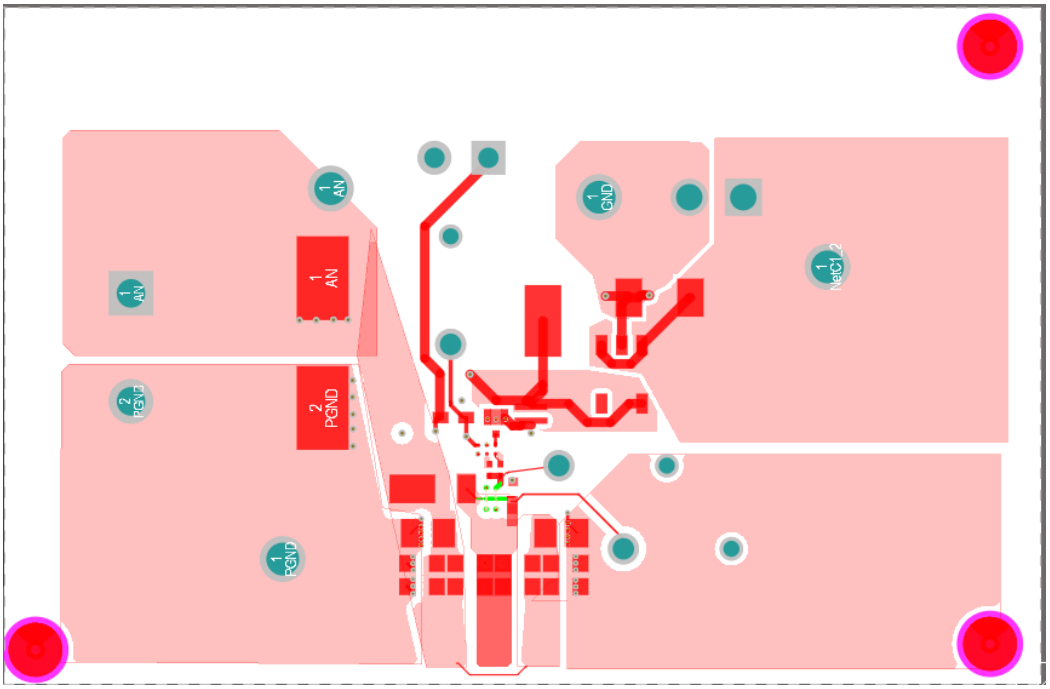

Figure 6 The top layer of INNELD050A1

Figure 7 The first middle layer of INNELD050A1

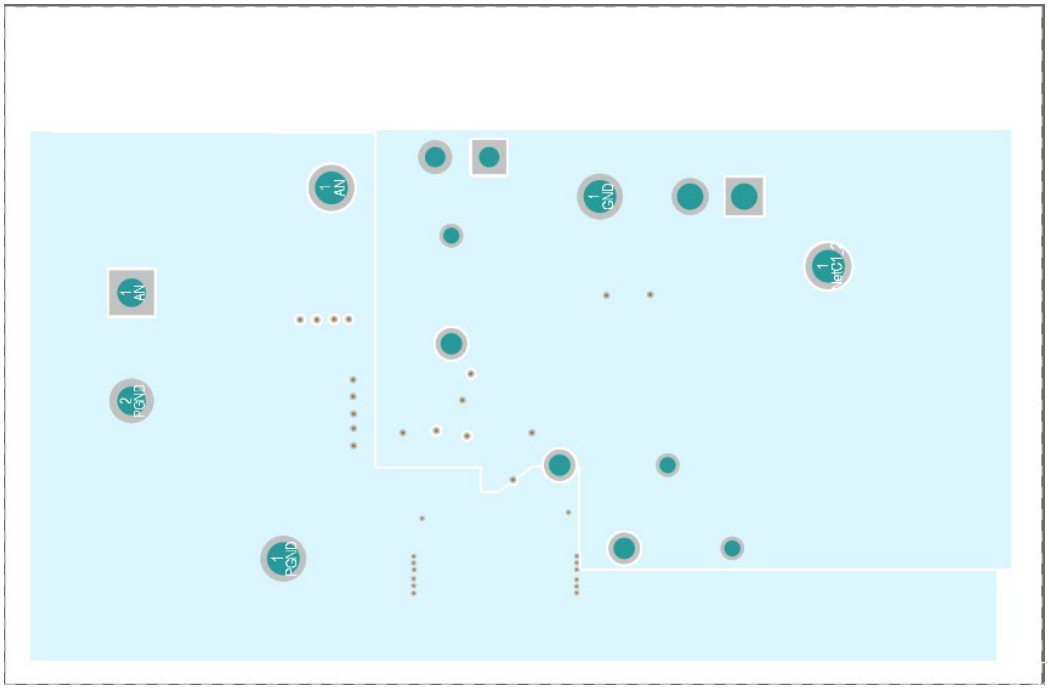

Figure 8 The second middle layer of INNELD050A1

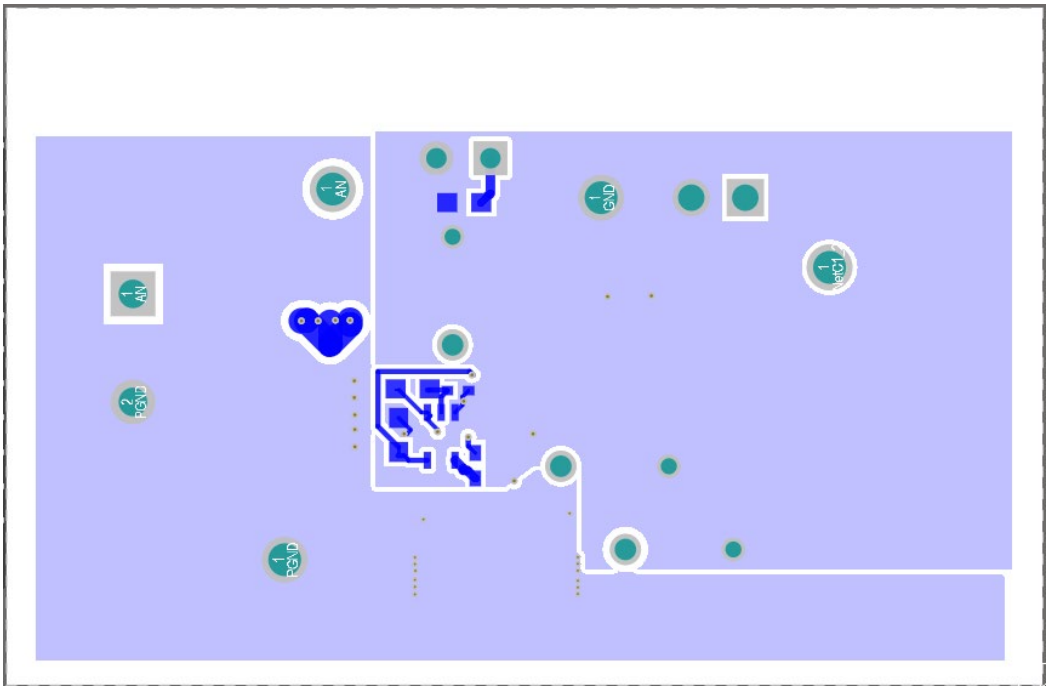

Figure 9 The bottom layer of INNELD050A1

Appendix B. BOM

Table 2 BOM

Designator	Part Number	Description	Footprint	Quantity
C1	885012208069	10 uF, 25 V, +/- 10%, X7R, 1206	1206	1
C2, C3	C0805C103F1GACTU	0.01 uF, 100 V, +/- 1%, C0G/NP0, 0805	0805L	2
C4	YFF18PW0J474M	0.47uF, 6.3V, SMD	YFF18PW	1
C5	UUX2A4R7MCL1GS	CAP, AL, 4.7uF, 100 V, +/- 20%, SMD	UUX_800x620	1
C6, C7, C8, C9	GRM188R72A104KA35D	0.1uF, 100 V, +/- 10%, X7R, 0603	0603L	4
C10	LWK107BJ105MV	1uF, 10 V, +/- 20%, X5R, 0306	0306	1
C11	GRM1555C1H200JA01D	20 pF, 50 V, +/- 5%, C0G/NP0, 0402	0402L	1
C12	GRM188R71E104KA01D	0.1uF, 25V, +/-10%, X7R, 0603	0603	1
D1	DFLS2100-7	Diode, Schottky, 100 V, 2 A, PowerDI123	PowerDI123	1
Q2	INN100W08	100V GaN Enhancement-mode FET;4A;WLCSP 2X3,Size: 1.508mm X 0.993mm	WLCSP 2X3	1
R1, R2	CMP-0027011-3	0ohm, 0201	0201L	2
R9	CRCW060350R0FKEA	RES, 50, 1%, 0.1 W, 0603	0603	1
R5, R6, R7, R8	CMP-0022469-2	RES, 4.02, 1%, 0.1 W, 0603	0603L	4
R4	CR0603-FX-4991ELF	RES, 4.99 k, 1%, 0.1 W, 0603	0603	1
R10	CRCW04020000Z0ED	0 ohm 0402	0402	1
U1	TPS70950DBVR	150-mA, 30-V, 1-uA IQ Voltage Regulators with Enable, DBV0005A (SOT-5)	DBV0005A_N	1
U2	XLMG1020	High Speed Gate Driver in WCSP Package, YFF	YFF0006AAAA	1
U3	SN74LVC1G08DCKR	Single 2-Input Positive-AND Gate, DCK0005A (SOT-5)	DCK0005A_N	1

Revision History

Date	Author	Versions	Description	Check
2/28/2023	Xinwei Li	1.0	First edition	AE Team

Note:
There is a dangerous voltage on the demo board, and exposure to high voltage may lead to safety problems such as injury or death.
Proper operating and safety procedures must be adhered to and used only for laboratory evaluation demonstrations and not directly to end-user equipment.

Reminder:
This product contains parts that are susceptible to electrostatic discharge (ESD). When using this product, be sure to follow antistatic procedures.

Disclaimer:
Innoscience reserves the right to make changes to the products or specifications described in this document at any time. All information in this document, including descriptions of product features and performance, is subject to change without notice. INNOIC ACCEPTSURBIT ACCEPTS NO LIABILITY ARISING OUT OF THE USE OF ANY EQUIPMENT OR CIRCUIT DESCRIBED HEREIN. The performance specifications and operating parameters of the products described in this article are determined in a stand-alone state and are not guaranteed to be performed in the same manner when installed in the customer's product. Samples are not suitable for extreme environmental conditions. We make no representations or warranties, express or implied, as to the accuracy or completeness of the statements, technical information and advice contained herein and expressly disclaim any liability for any direct or indirect loss or damage suffered by any person as a result